大同大學103學年度(寒)轉學入學考試試題

考試科目: 材料科學導論　　系別: 材料工程學系　　第1/1頁

註:本次考試 不可以參考自己的書籍及筆記； 不可以使用字典； 不可以使用計算器。

1. (單選) Which of the following interrelationship between processing, structure, properties, and performance is correct? (5%)
   a) Properties *determing* Structure *determing* Performance *determing* Processing
   b) Properties *determing* Processing *determing* Performance *determing* Structure
   c) Structure *determing* Properties *determing* Performance *determing* Processing
   d) Processing *determing* Structure *determing* Properties *determing* Performance

2. (複選) Which of the following materials is/are classified as ceramic? a) cast irons b) Al_2O_3, c) Ti-6Al-4V, d) Si_3N_4, e) PVC (5%),

3. Give the stacking sequence, family of close-packed planes, and family of close-packed directions for the following close-packed crystal structures.
   a) face-centered cubic structure (2%, 2%, 2%),
   b) hexagonal close-packed structure (2%, 2%, 2%)

4. Determine the indices for a) the direction and b) the plane shown in the following unit cells. (5%, 5%)

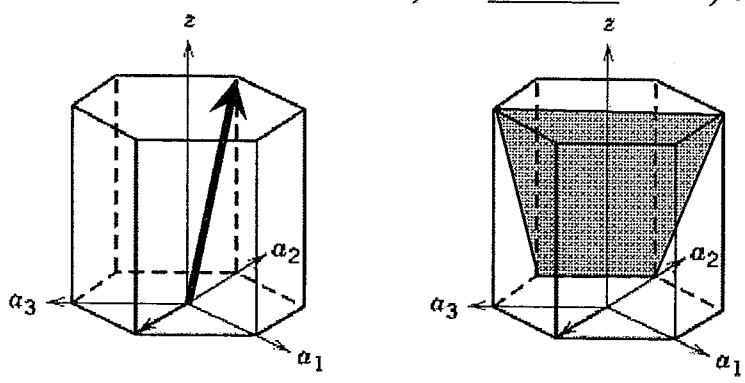

a)　　b)

5. Give the relationship between the equilibrium number of vacancies in a crystal and temperature. (5%)

6. Give three types of a) point defects and b) interfacial defects, respectively, in a crystal. (6%, 6%)

7. What is the relationship between atomic diffusion and vacancies in a crystal? (5%)

8. What is the major structural imperfection which determines the mechanical properties of metals? (6%)

9. Distinguish mechanical strength and toughness. (5%)

10. What is the relationship between solid-solution strengthening and dislocation slip? (5%)

11. a) What is the driving force for recrystallization in a cold-worked metal? (5%)
    b) What is the driving force for grain growth in a polycrystalline solid? (5%)

12. What is the definition of fatigue fracture? (5%)

13. What is a) pearlite microstructure and b) tempered martensite in carbon steels? (5%, 5%)

14. (複選) What is/are the major bonding(s) in ceramics? a) covalent bond, b) Van der Waals bond, c) ionic bond, d) hydrogen bond, e) metallic bond (5%)